Ex wood-fired six angle heater 37kW

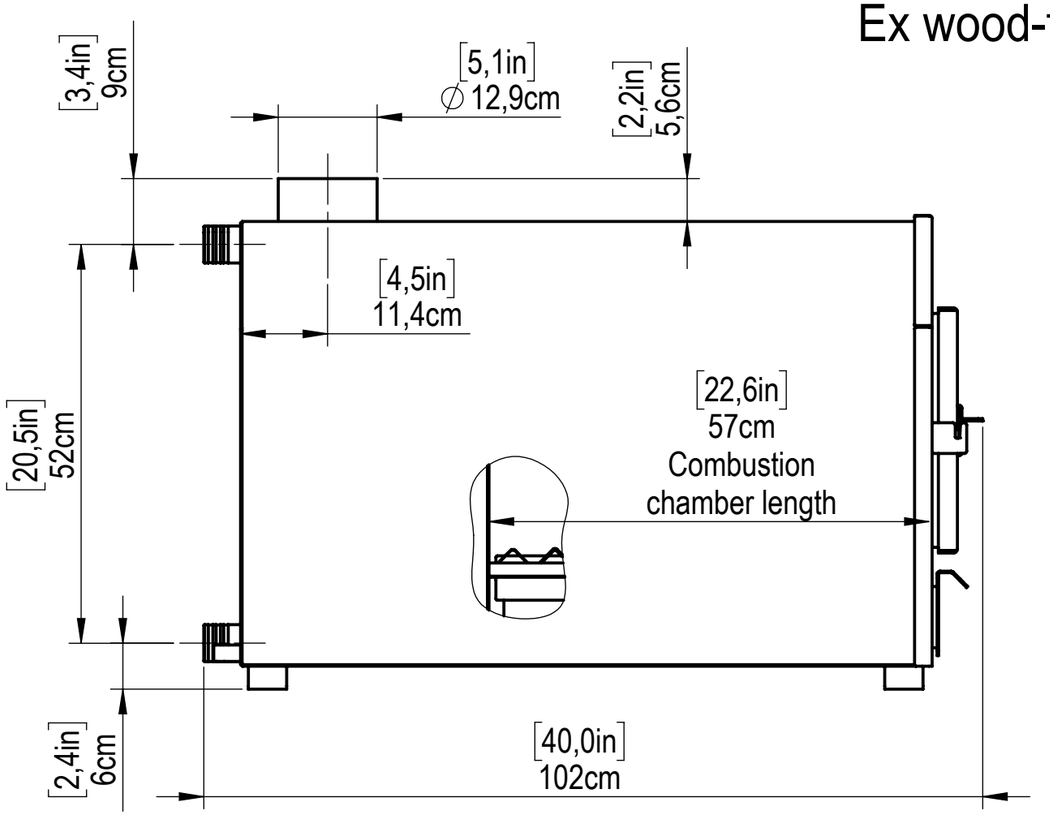

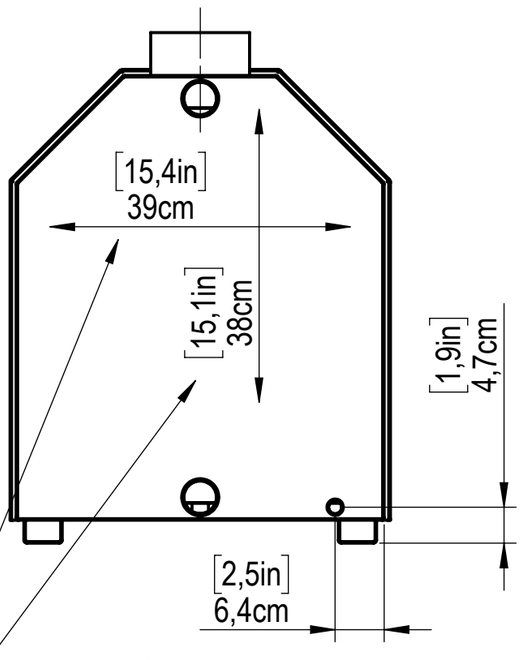

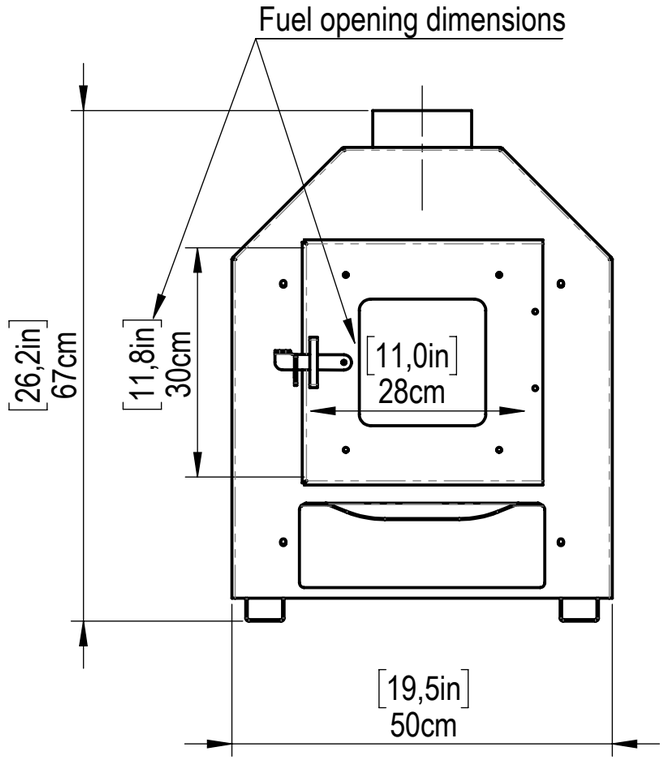

Combustion chamber
crossection dimensions

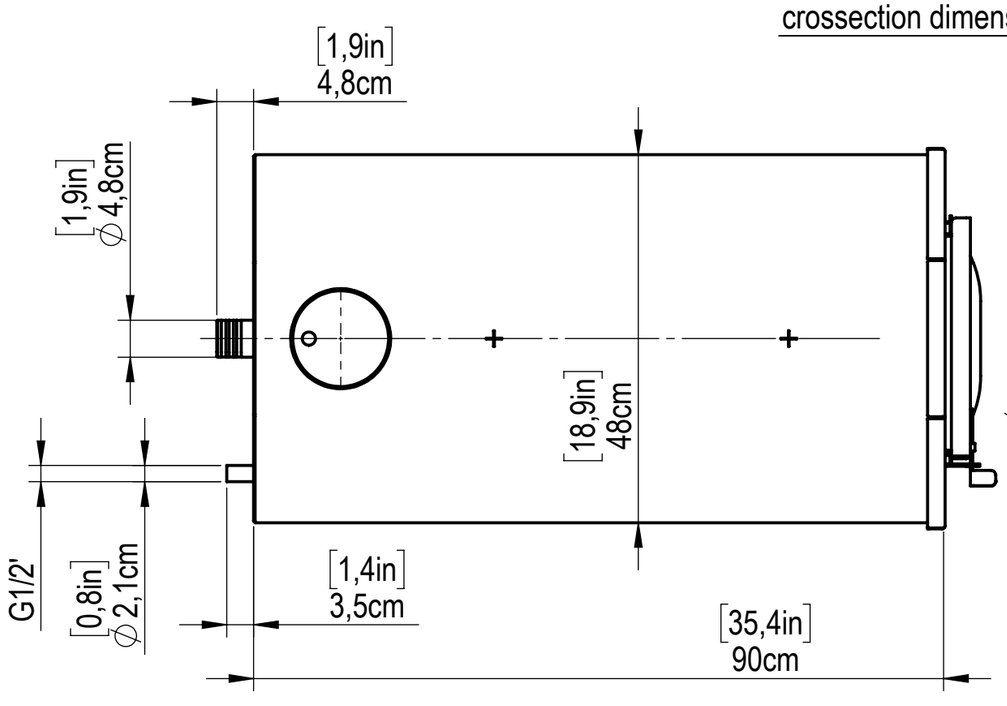

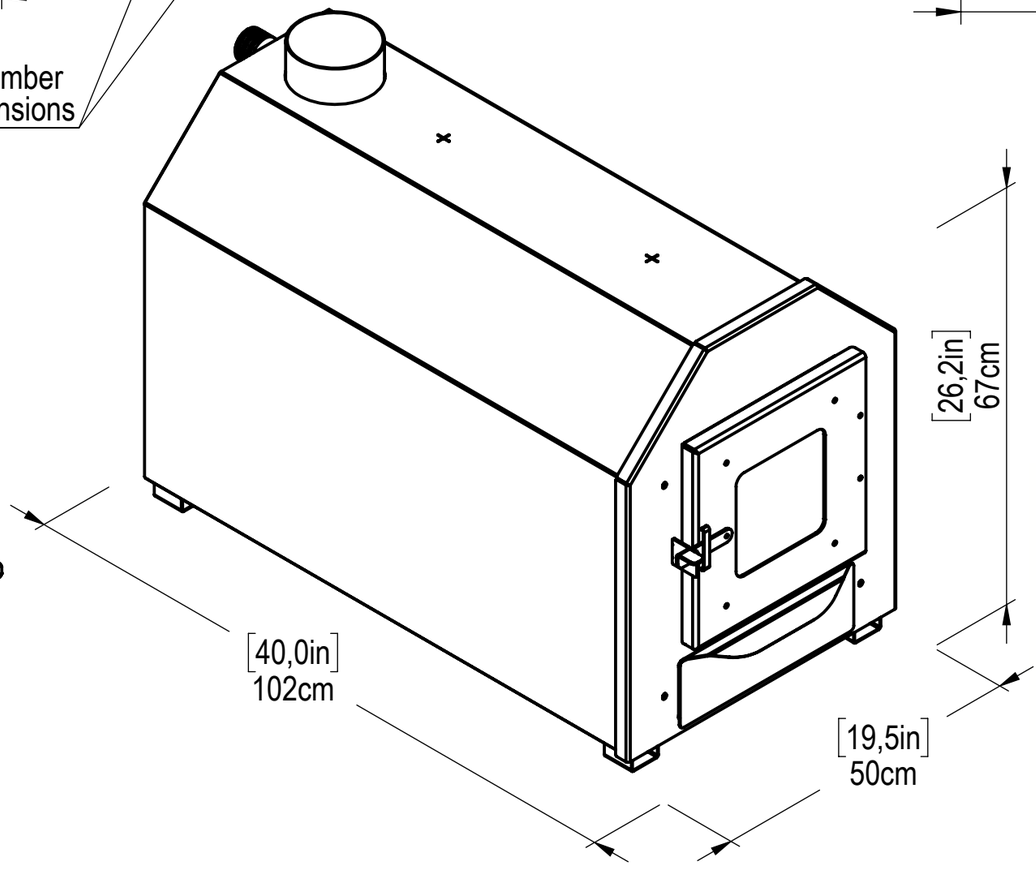

TEN SPA