Ex wood-fired six angle heater 24kW

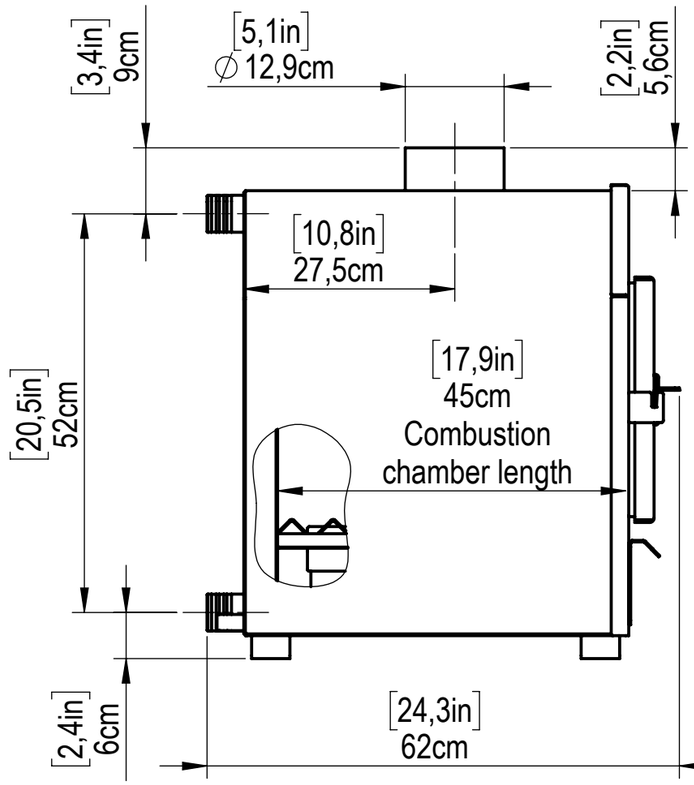

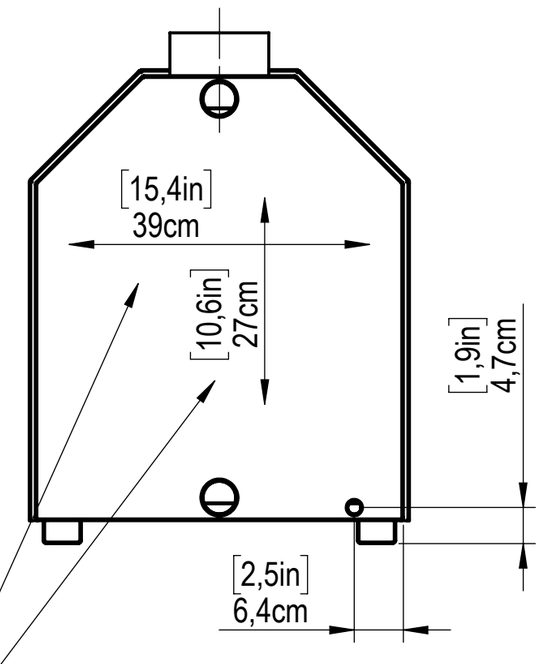

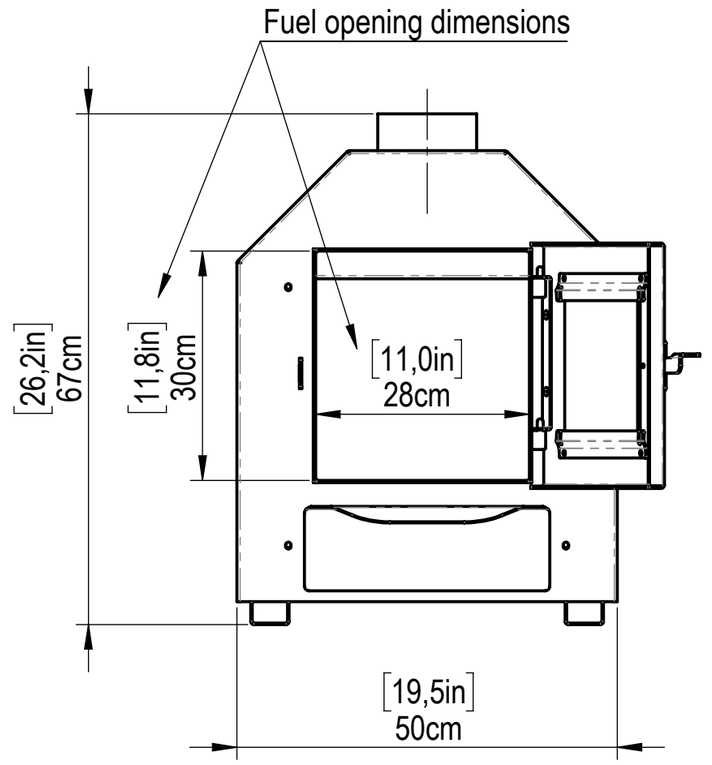

Combustion chamber
crossection dimensions

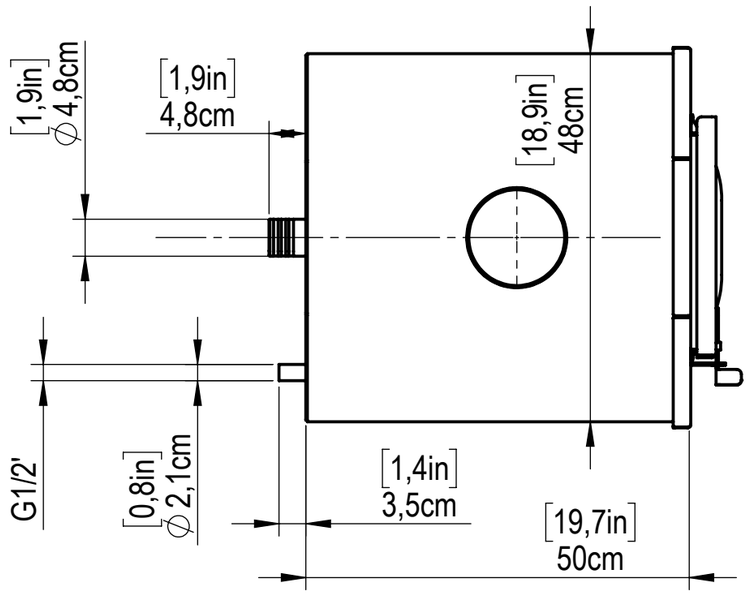

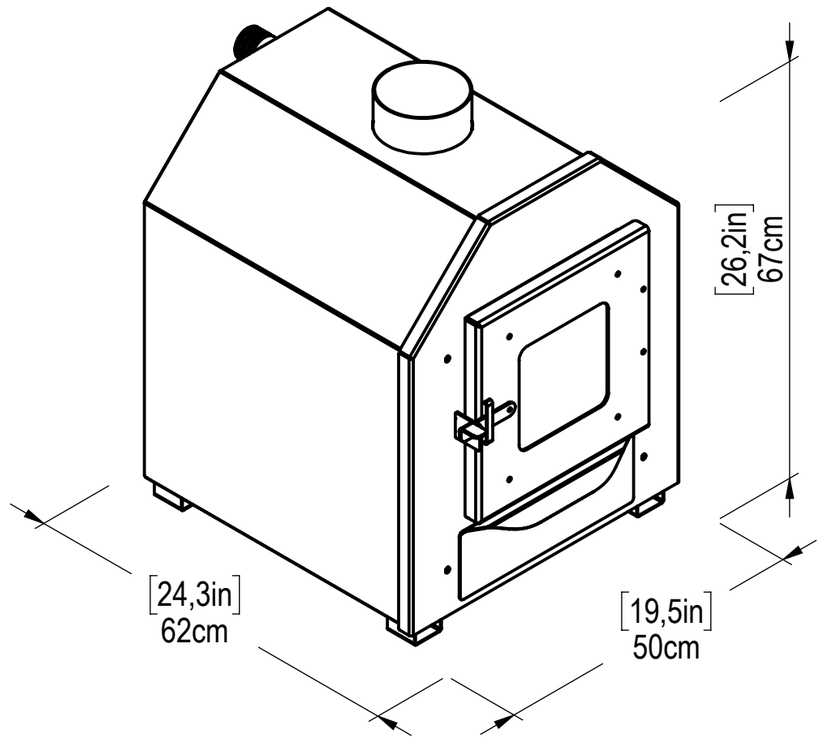

TEN SPA