Ex wood-fired square heater 22kW

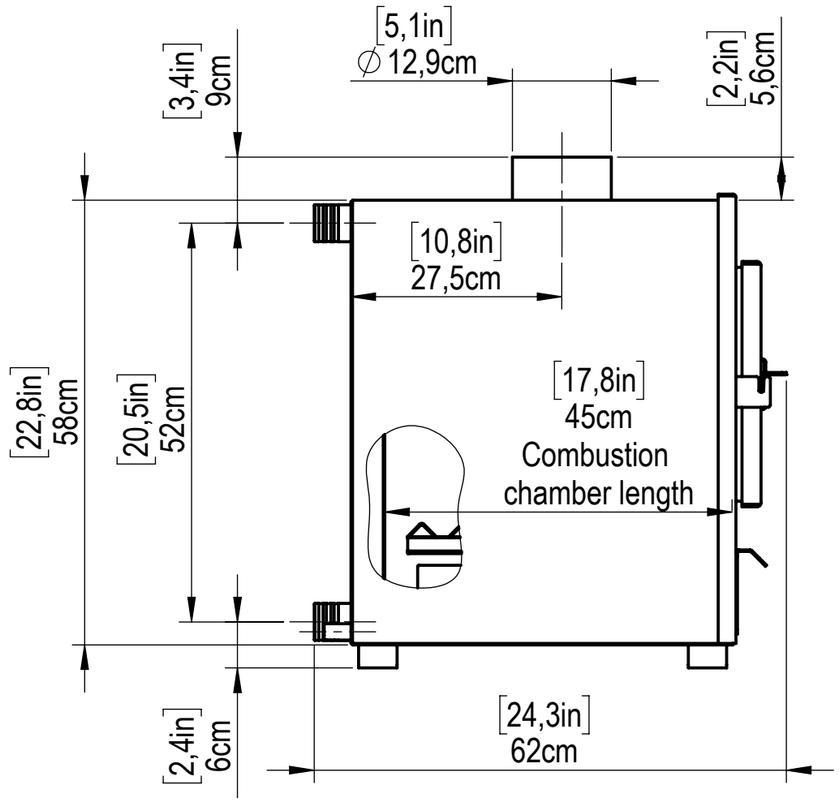

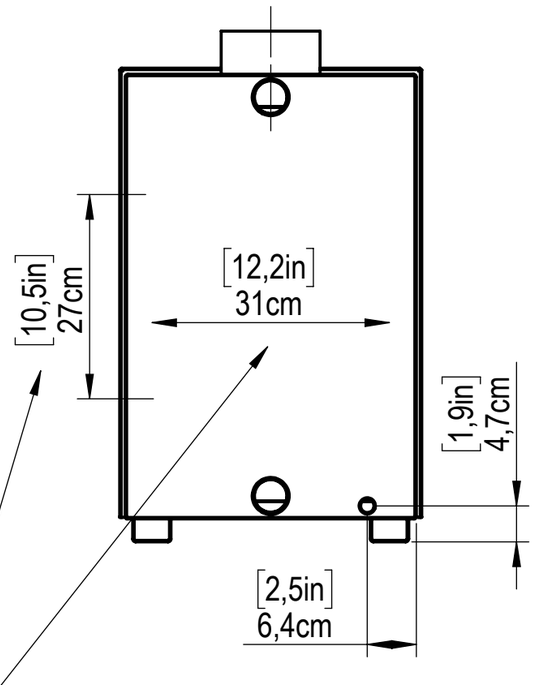

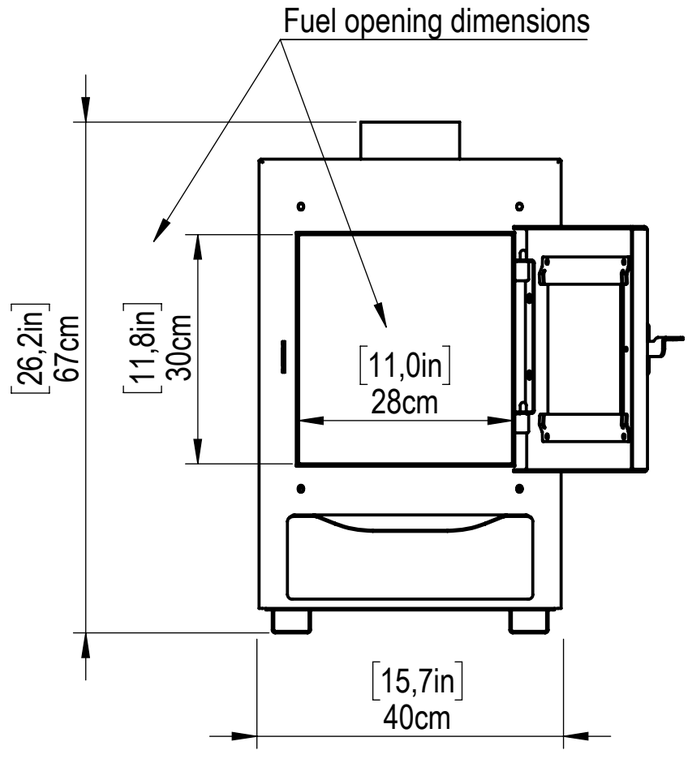

Combustion chamber
crossection dimensions

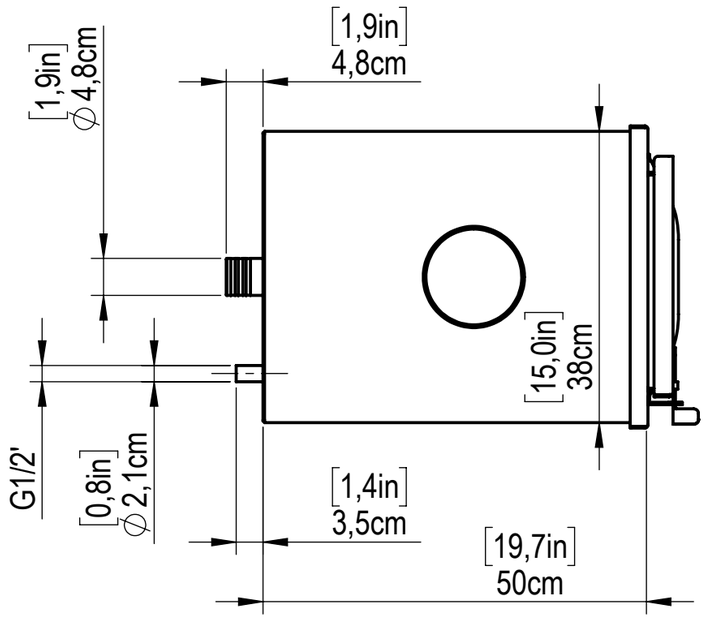

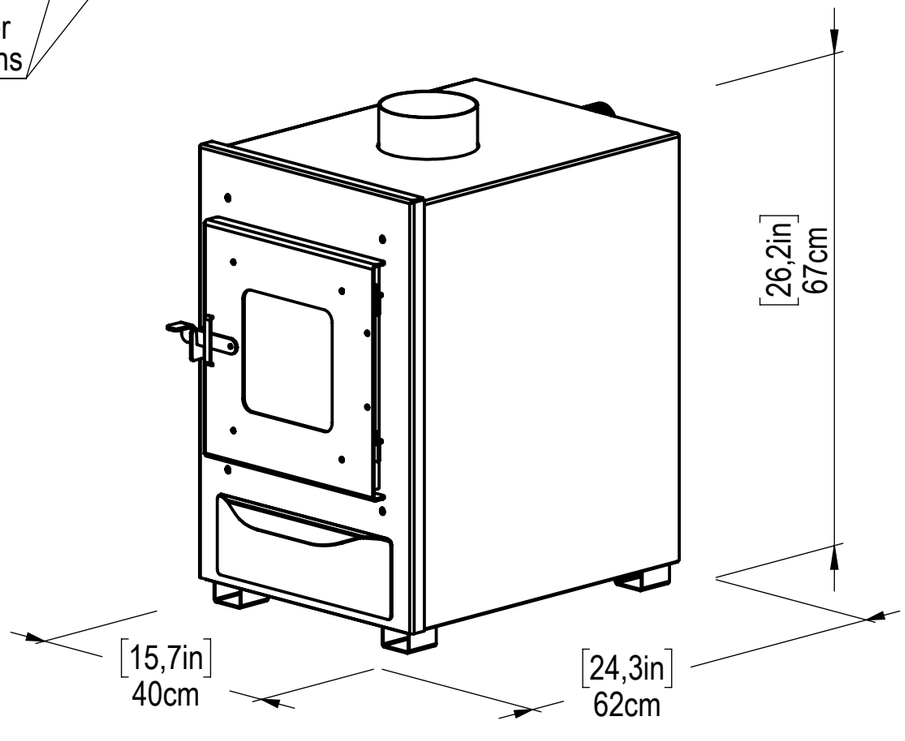

TEN SPA