Ex wood-fired square heater 28kW

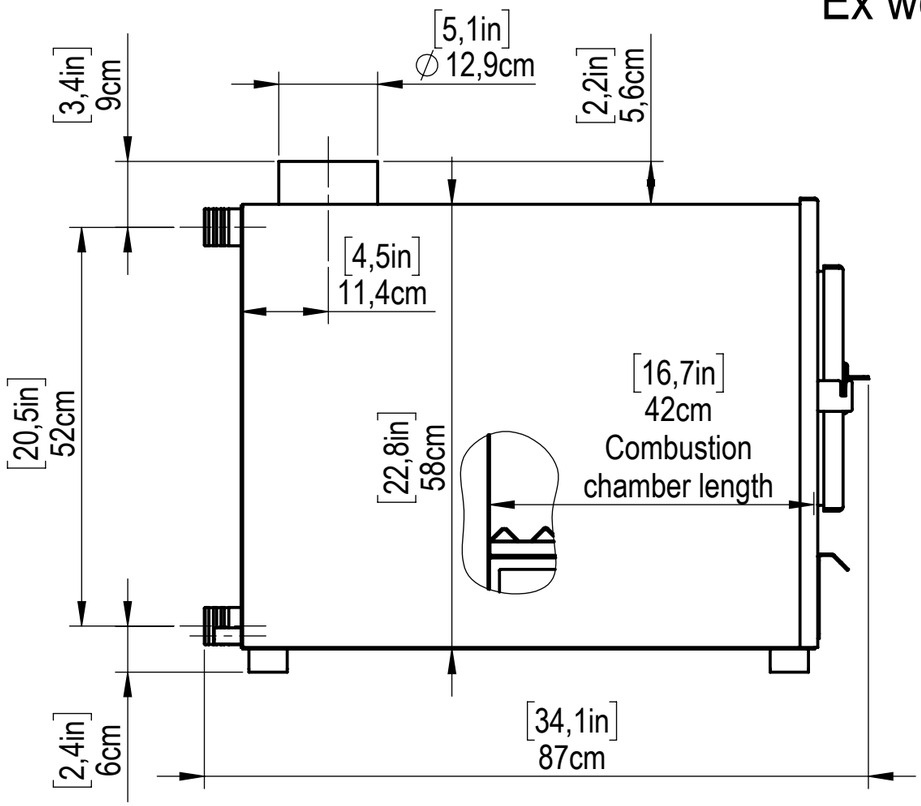

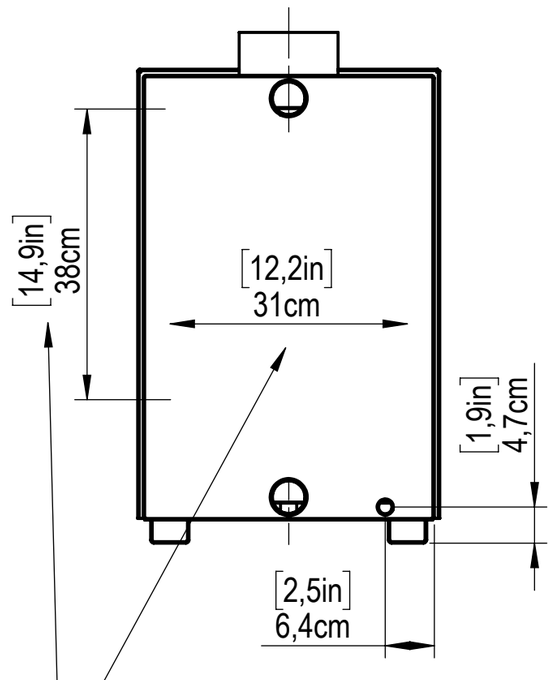

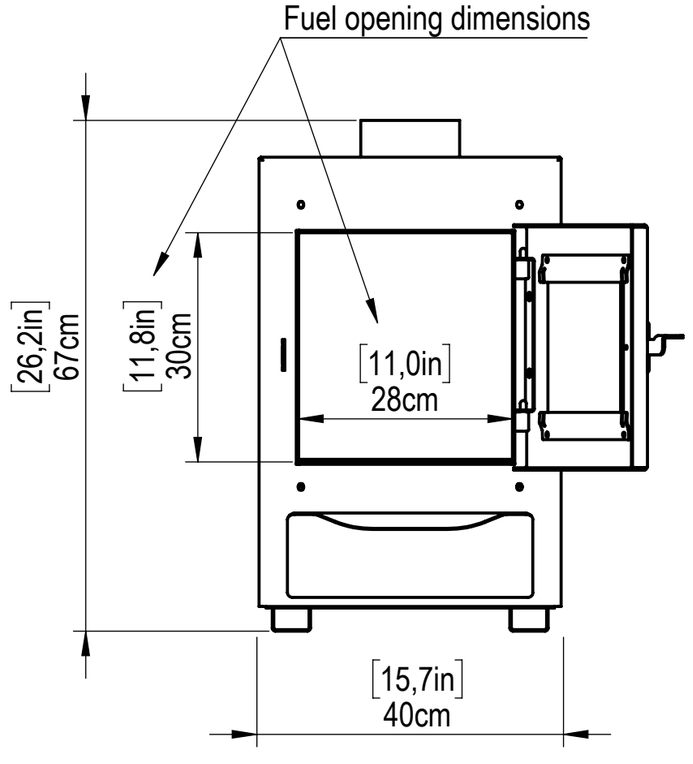

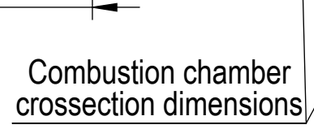

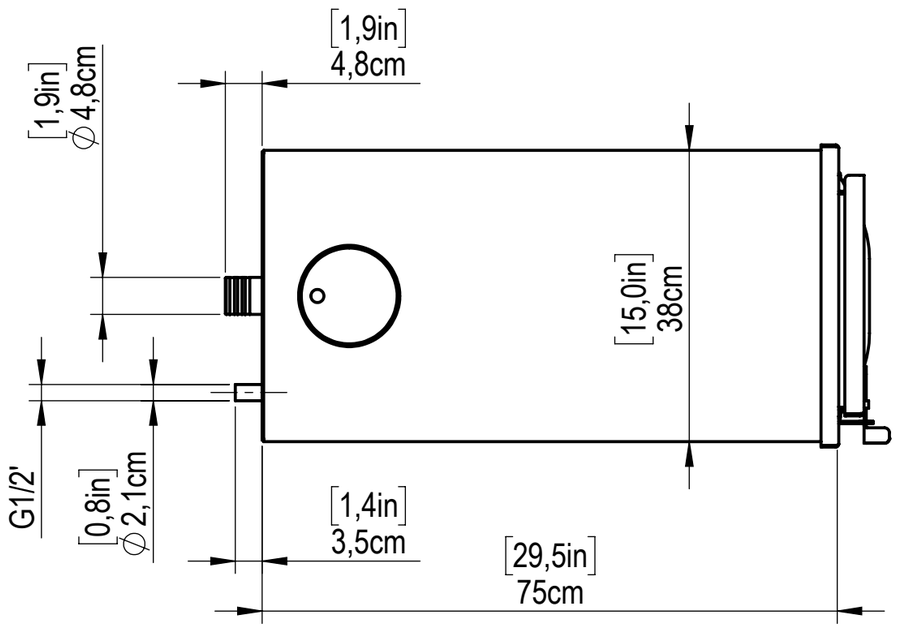

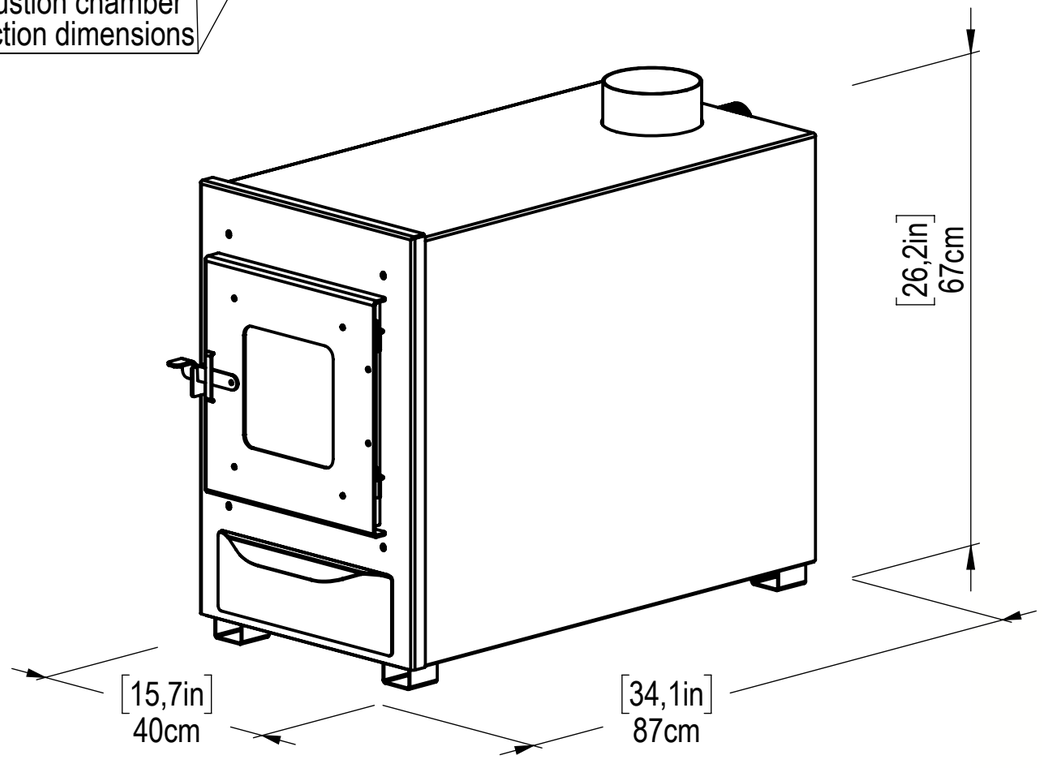

TEN SPA